Narrative Standing Desk V2 C-Frame

UPL980

UPLIFT DESK
Work Better. Live Healthier

Attention: For Narrative Standing Desk assembly, discard the instruction manual included with the UPLIFT V2 Standing Desk Frame and use this instruction manual instead.

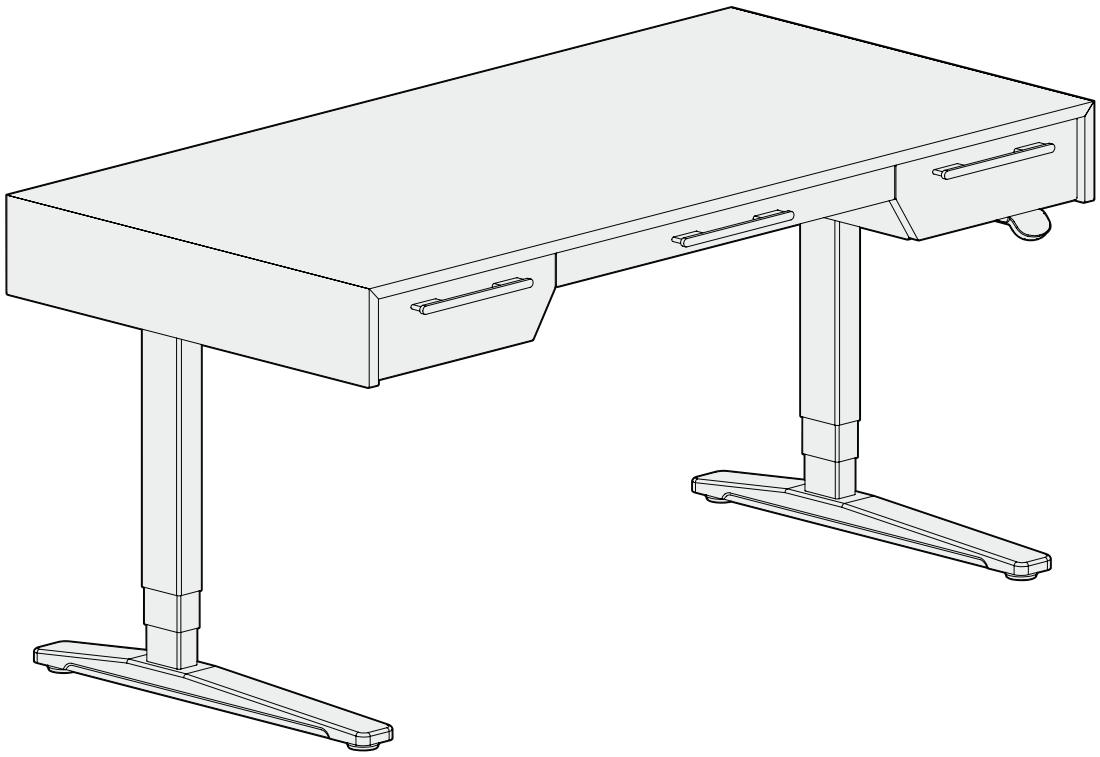

Two person assembly

Scan QR code for product webpage

For assembly assistance, visit upliftdesk.com/contact, call 800-349-3839, or email support@upliftdesk.com

©2023 UPLIFT Desk®. All Rights Reserved. Patented

Safety and Warnings



WARNING: Read all instructions before assembly. Failure to assemble or operate the desk properly may result in damage or personal injury. Retain this manual for future reference or owners.



WARNING: Keep fingers and body parts clear of the moving desk edges. Check the desk's surroundings on all sides before raising or lowering the desk to ensure there are no obstacles that can be damaged or damage the desk.



WARNING: Ensure all desk and accessory cords have enough slack so they don't pull as the desk moves up and down.



WARNING: Keep children away from the desk unless supervised. Misuse of the desk can cause personal injury. If children cannot be supervised at all times, use the desk's safety lock feature or remove the power cord to prevent its operation.



WARNING: The desk is designed for use in dry indoor environments only. Use of desk outdoors or in damp locations will damage the desk and can cause risk of electric shock, fire, or personal injury.



WARNING: Only plug the desk into a properly grounded 100-240V power outlet. Using a voltage converter is considered improper use and can cause damage to the desk.



WARNING: Do not open or insert any object into any desk frame component such as the legs or control box. Doing so may cause damage and can cause risk of electric shock.



WARNING: In case of spilled liquid on any electrical desk component, disconnect the desk from the power outlet immediately. Clean up the spill with a dry cloth and plug the desk back into the power outlet. There is a risk of desk failure or electric shock if desk components become wet.



WARNING: Never use the desk if the power cord or plug becomes damaged as this can cause a risk of fire and electric shock. Contact UPLIFT Desk for a replacement power cord if it is damaged in any way.



WARNING: Risk of serious injury or death. Adjusting the height of the desk can pinch or crush body parts trapped between the desktop and stationary objects. Do not place feet or other body parts on any items located under the desk other than on approved items such as foot rests and desk mats.



WARNING: Be sure there is a gap of at least 1" between the moving parts of the standing desk and objects located next to it to avoid pinch and crush hazards. Move the desk through its full range of motion to ensure the 1" gap is maintained above, below, and all around the desk.



WARNING: Persons with limited mental or physical capabilities who are unable to comprehend the safe operation of the height adjustability feature must be supervised and must not operate the desk.



WARNING: Inspect the desk regularly and stop using immediately if you notice any damaged or loose parts. Only replace damaged desk parts with authorized UPLIFT Desk parts.

Please read these instructions carefully. This desk is height adjustable to fit the user's height. Inappropriate use of this desk can cause property damage and/or bodily injury. Under no circumstances does the manufacturer accept warranty or liability claims for damages caused from improper use of this desk. Please provide these instructions to any new user or owner of the desk.

Note: Desk image is for reference only and may not match your desk style.

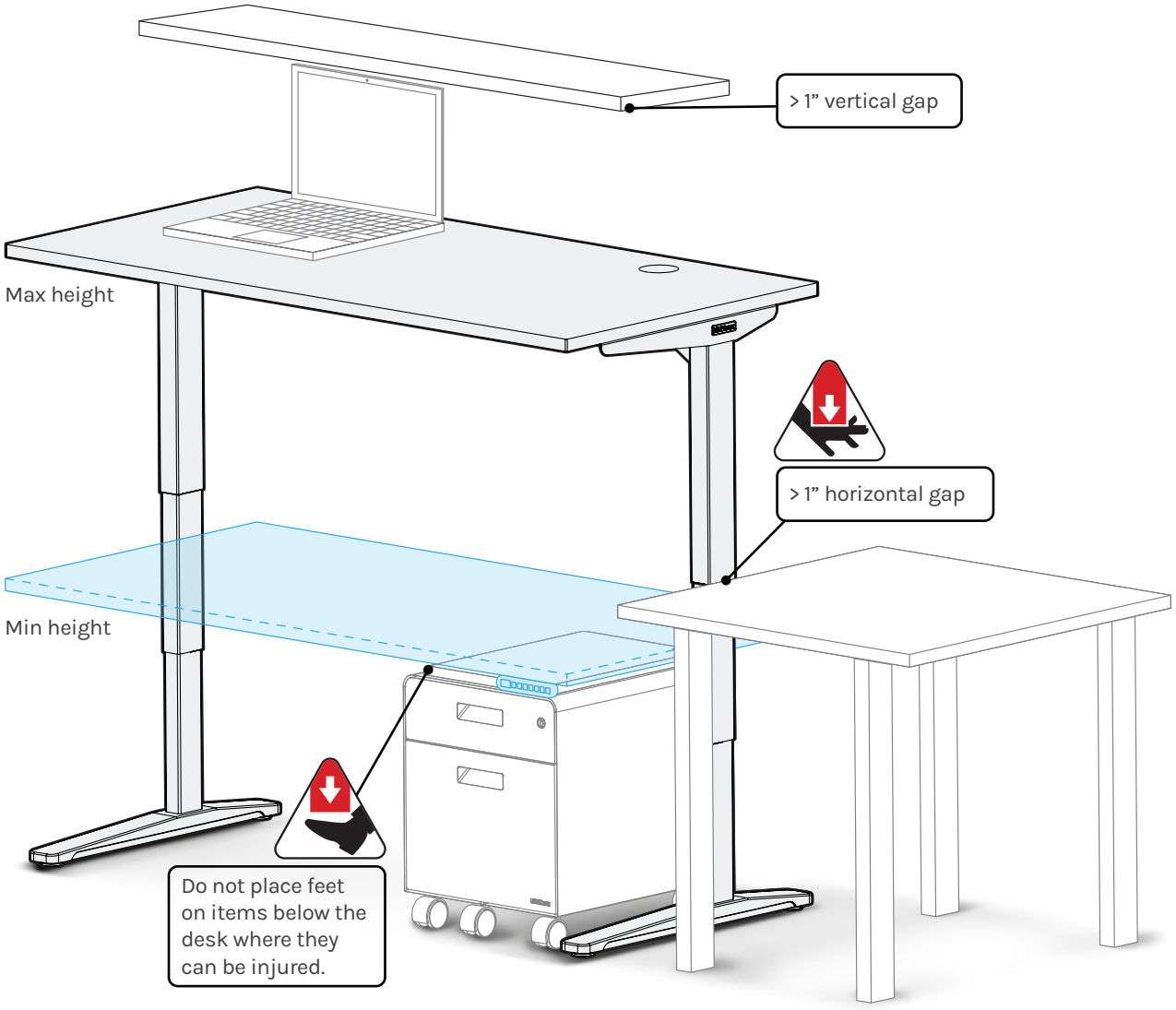

Package Contents

F500 Frame Box Components

P4 Leg qty 2 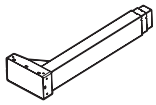	**P5** Crossbar End qty 2 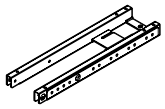	**P6** Crossbar Rail qty 2 	**P7** Control Box 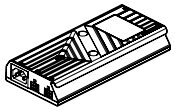	**P8** Keypad Type varies
P9 Power Cable 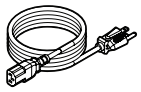	**P10** Leg Extension Cable 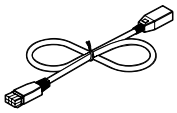	**P11** Anchor Plate qty 2 	**P12** Wire Management Tray 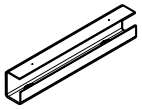	

F500 C-Frame Feet & Side Brackets Box Components

P1 Foot Includes leveling glides, qty 2 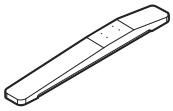	**P2** Side Bracket qty 2 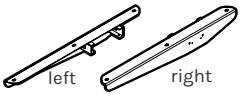	**P16** Logo Plate qty 2 	**H1** M6 x 10 Screw qty 4 

F500 Hardware Components

H1 M6 x 10 Screw qty 16 	**H2** M6 x 14 Screw qty 8 	**H3** M8 x 8 Set Screw qty 8 	**H4** #10-24 x 5/8" Screw qty 8  Received with the Narrative desk	**H5** Washer qty 8 	**H6** 4mm Allen Wrench 
H7 M8 x 10 Screw qty 4 	**H8** 5mm Allen Wrench 	**H9** Cable Mount qty 10 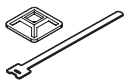	**H14** #10 x 5/8" Wood Screw qty 4 	**H15** Allen Wrench Handle 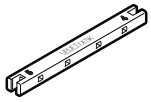	

You'll also need

Phillips Screwdriver

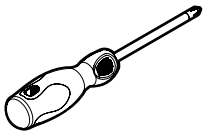

Parts Diagram

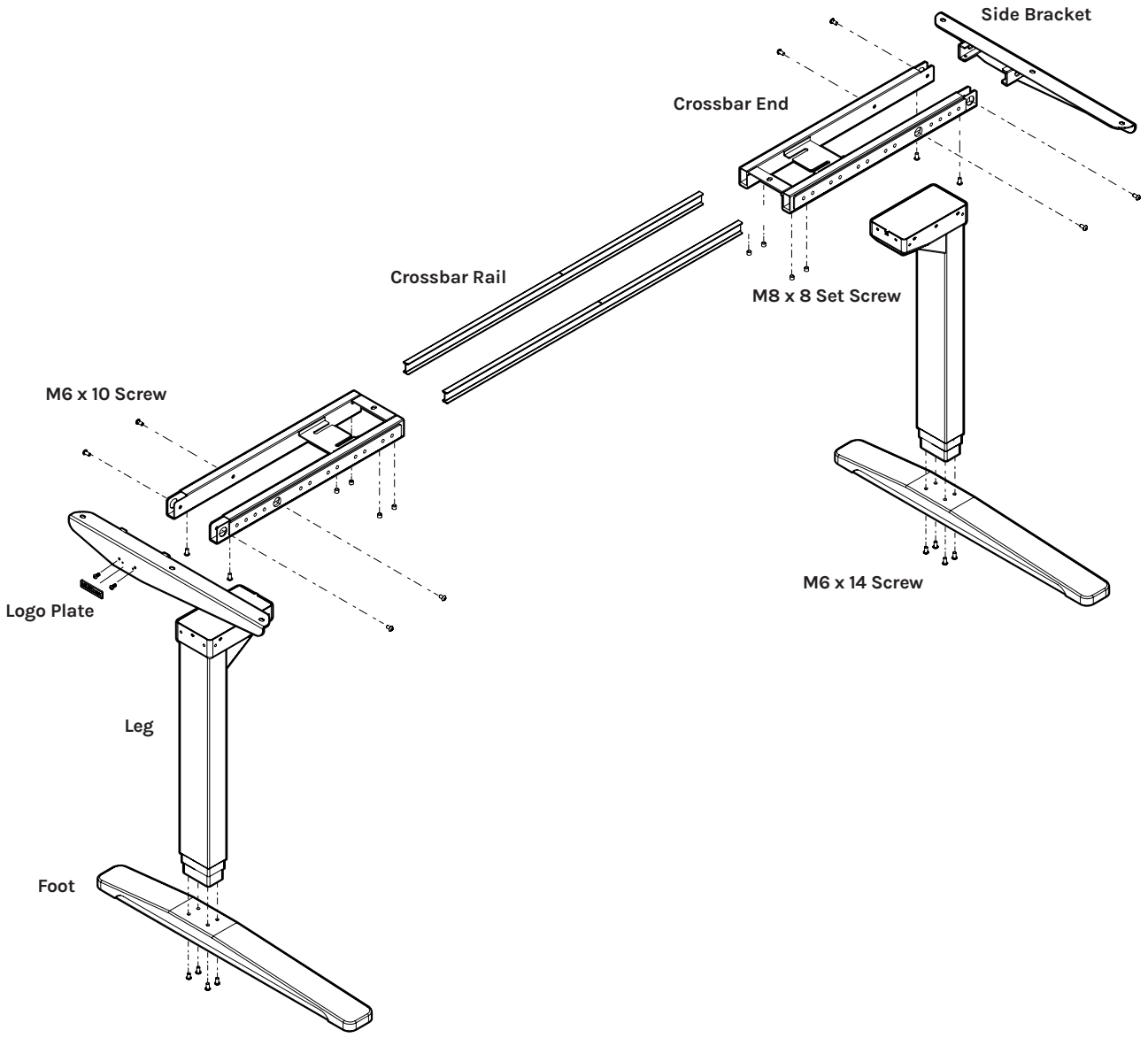

Step 1 - Inventory of Parts

A. To avoid damage to your floor or desktop, assemble the desk on a clean carpet or blanket.

B. Lay out all parts from each box and ensure you have everything listed in the package contents of this manual before throwing away any packaging.

If a part is missing, please triple check that the part isn't in a box. Check boxes very thoroughly by removing all packaging; check every nook and cranny. If the part is still missing, call (800) 349-3839 or email support@upliftdesk.com before beginning assembly.

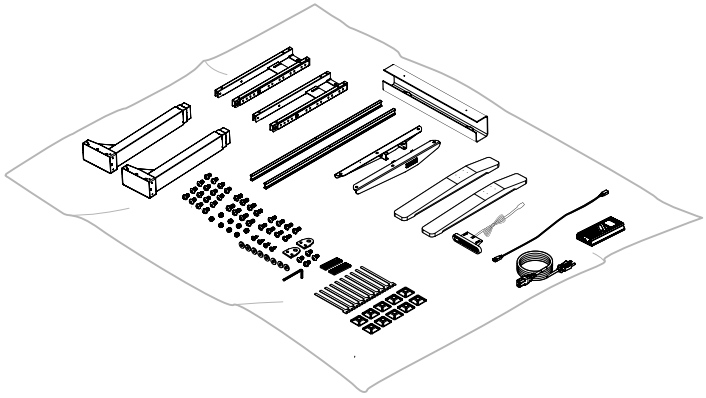

Step 2 - Attach Crossbar Ends

A. Position a Crossbar End **(P5)** as shown.

B. Position a Leg **(P4)** so that the back of the Leg is flush with the back of the Crossbar End.

C. Use the 4mm Allen Wrench **(H6)** to loosely start four M6 x 10 Screws **(H1)** through the holes in the sides of the Crossbar End and into the threaded holes in the sides of the Leg, but do not tighten the screws yet.

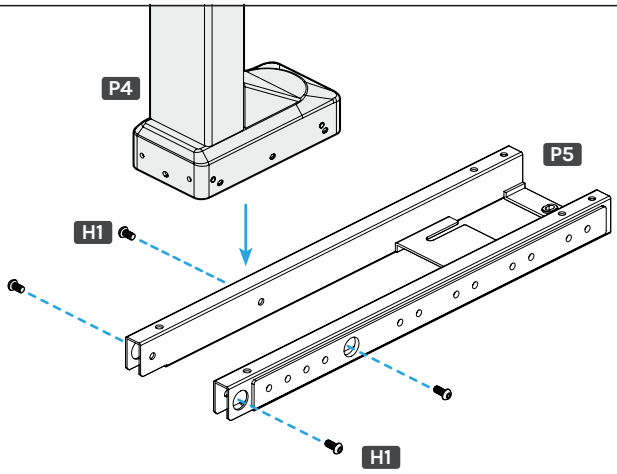

Step 3 - Attach Side Brackets

A. Position a Side Bracket **(P2)** as shown and insert the tabs into the openings at the back of the Crossbar End **(P5)**.

Loosely start two M6 x 10 Screws **(H1)** through the holes in the top of the Crossbar End and into the threaded holes in the top of the Side Bracket tabs, but do not tighten the screws yet.

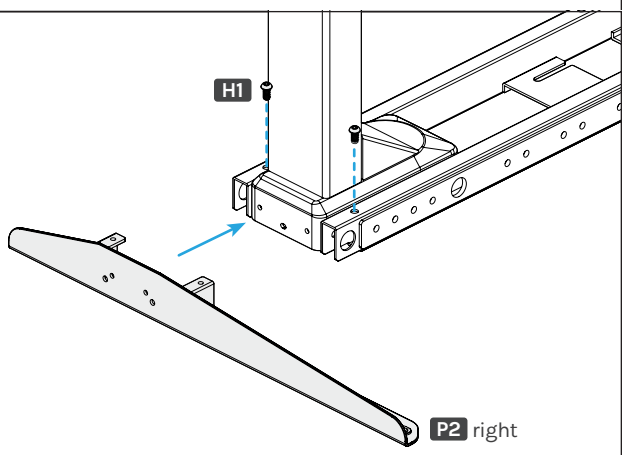

B. Loosely start two more M6 x 10 Screws through the two larger holes in the face of the Side Bracket and into the threaded holes in the back of the Leg.

C. Tighten all eight screws from Steps 2 and 3 with the 4mm Allen Wrench **(H6)**.

D. Repeat Steps 2 and 3 to attach the second Crossbar End and Side Bracket.

IMPORTANT: Ensure all screws are tight before proceeding.

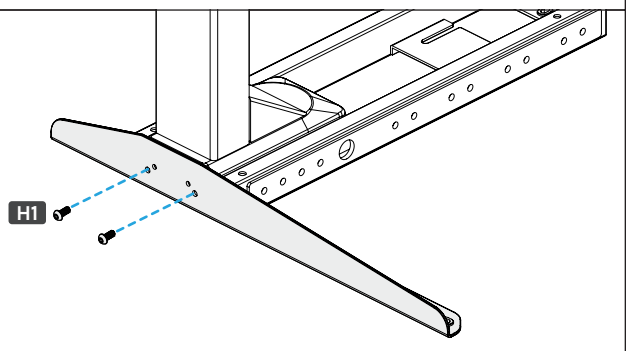

Step 4 - Attach Logo Plates (optional)

Attaching the Logo Plates is optional. They are concealed from view on the Narrative Desk.

A. Align the posts on the back of a Logo Plate **(P16)** with the two smaller holes in the face of the Side Bracket. The Logo Plate should be upside down at this point.

B. Firmly press the posts into the holes until Logo Plate edges are flush with the face of the Side Bracket, concealing the two screws.

C. Repeat the previous steps to attach the second Logo Plate.

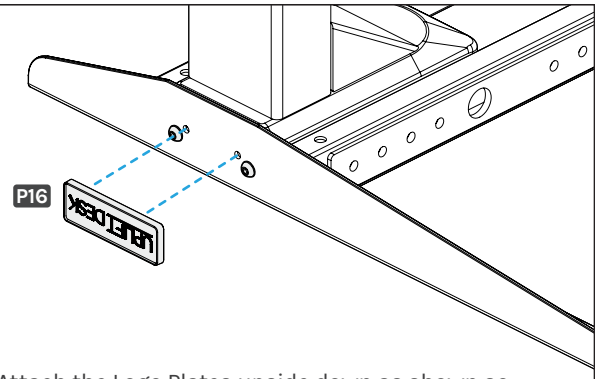

Attach the Logo Plates upside down as shown so they are right-side up when the desk is flipped over.

Step 5 - Attach Feet

A. When attaching the feet to the outside legs, make sure the long ends of the Feet are facing in the same direction as the long ends of the Side Brackets. Place one of the Feet **(P1)** on top of one of the Legs as shown and align the four holes in the Foot with the four threaded holes in the end of the Leg.

B. Loosely insert four M6 x 14 Screws **(H2)** through the holes in the Foot and into the threaded holes in the Leg, but don't tighten them until all four screws have been started.

C. Tighten screws using the 4mm Allen Wrench **(H6)** attached to the Allen Wrench Handle **(H15)** to provide more leverage when tightening screws.

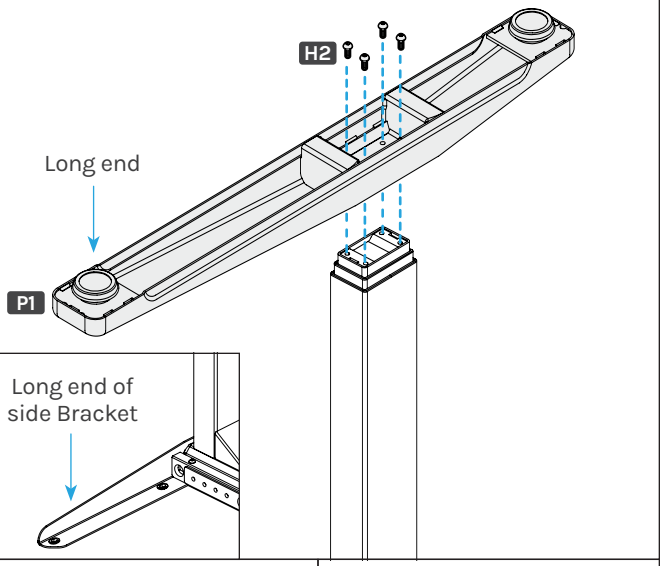

IMPORTANT: Tighten Foot screws very thoroughly to ensure the stability of the desk.

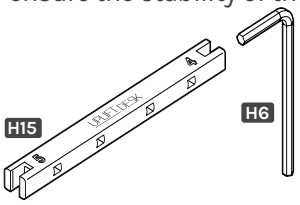

D. Repeat the previous steps to attach the second Foot. Tighten screws very thoroughly.

IMPORTANT: Retighten each screw again to ensure that all screws are **VERY** tight before proceeding. Tightening these screws has a noticeable impact on desk stability.

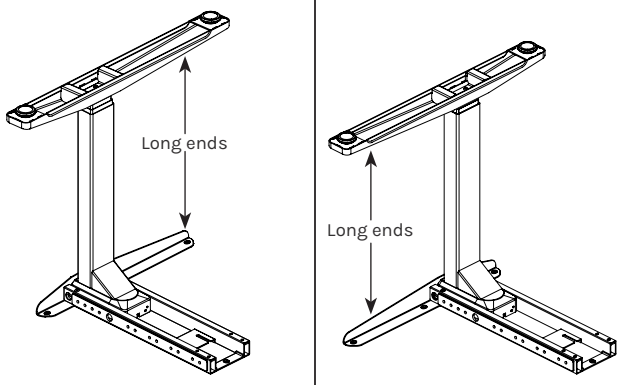

Assemblies created in this step.

Step 6 - Insert Crossbar Rails

A. Position the Leg assembly shown with Side Bracket on the left and the long end pointing in the direction shown.

B. Insert a Crossbar Rail **(P6)** into each of the two openings at the end of the Crossbar End **(P5)**.

C. Slide the Crossbar Rails into the Crossbar End as far as they will go.

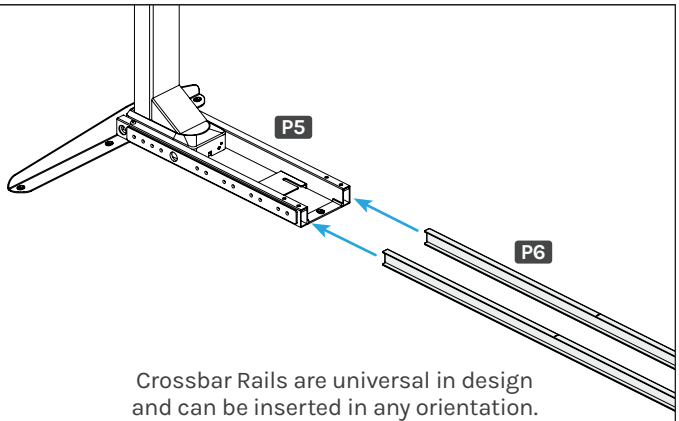

Crossbar Rails are universal in design and can be inserted in any orientation.

Step 7 - Add Second Leg Assembly

A. Position the other Leg assembly as shown and slide the Crossbar End onto the ends of the Crossbar Rails **(P6)**.

B. Slide the Leg assembly onto the Crossbar Rails as far as it will go.

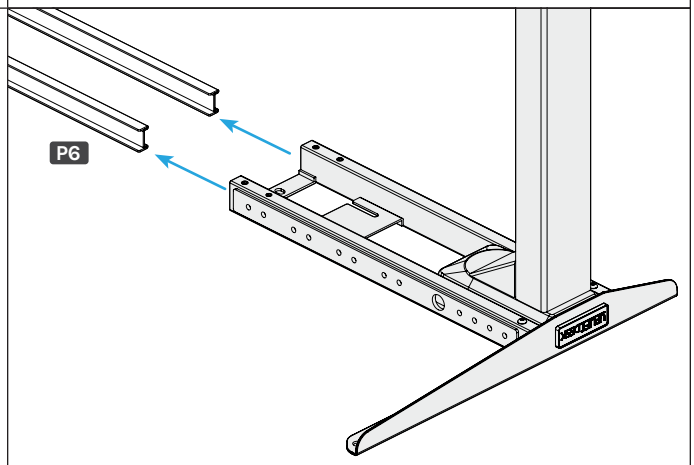

Step 8 - Frame Attachment

A. Carefully remove the Narrative desktop from its packaging and place it on a clean blanket or carpet with the underside facing up as shown.

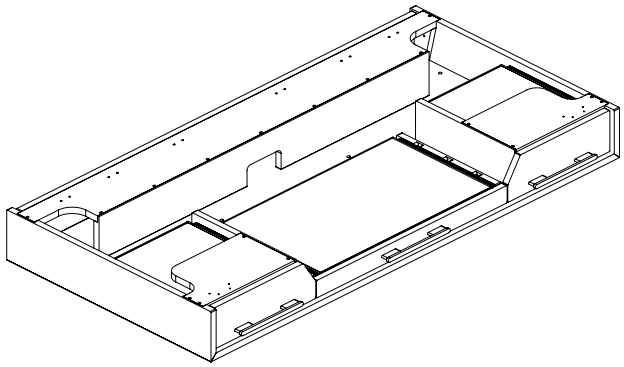

B. Slide out the left and right side drawers on the desktop to reveal all frame attachment points.

C. With the help of a second person, carefully set the frame assembly into the Narrative desktop in the orientation shown.

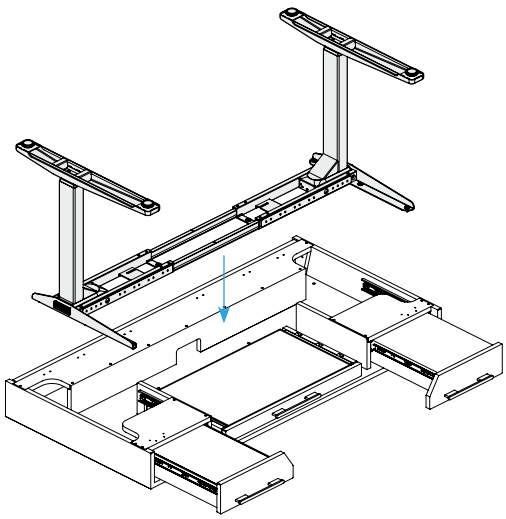

D. Align the holes in the left and right Side Brackets with the metal threaded inserts installed in the Narrative desktop.

E. Use a Phillips Screwdriver to insert #10-24 x ⅝" Screws **(H4)** (included with the Narrative desktop) and Washers **(H5)** (included with the desk frame) through the holes in the Side Brackets and into the metal threaded inserts in the Narrative desktop. Do not tighten the screws yet.

IMPORTANT: Be sure to use the #10-24 x ⅝" Screws **(H4)** included with the Narrative desktop and **NOT** the #10-24 x ¾" Screws **(H4b)** received with the desk frame.

F. Align the hole in each Crossbar End with the metal threaded insert installed in the Narrative desktop.

G. Use a Phillips Screwdriver to insert a #10-24 x ⅝" Screw **(H4)** (included with the Narrative desktop) and a Washer **(H5)** (included with the desk frame) through the hole in each Crossbar End and into the metal threaded insert in the Narrative desktop.

IMPORTANT: Be sure to use the #10-24 x ⅝" Screws **(H4)** included with the Narrative desktop and **NOT** the #10-24 x ¾" Screws **(H4b)** received with the desk frame.

H. Once all eight screws from the previous steps have been started, tighten them with the Phillips Screwdriver. Be careful not to overtighten the screws to avoid stripping.

IMPORTANT: Ensure all screws are tight before proceeding.

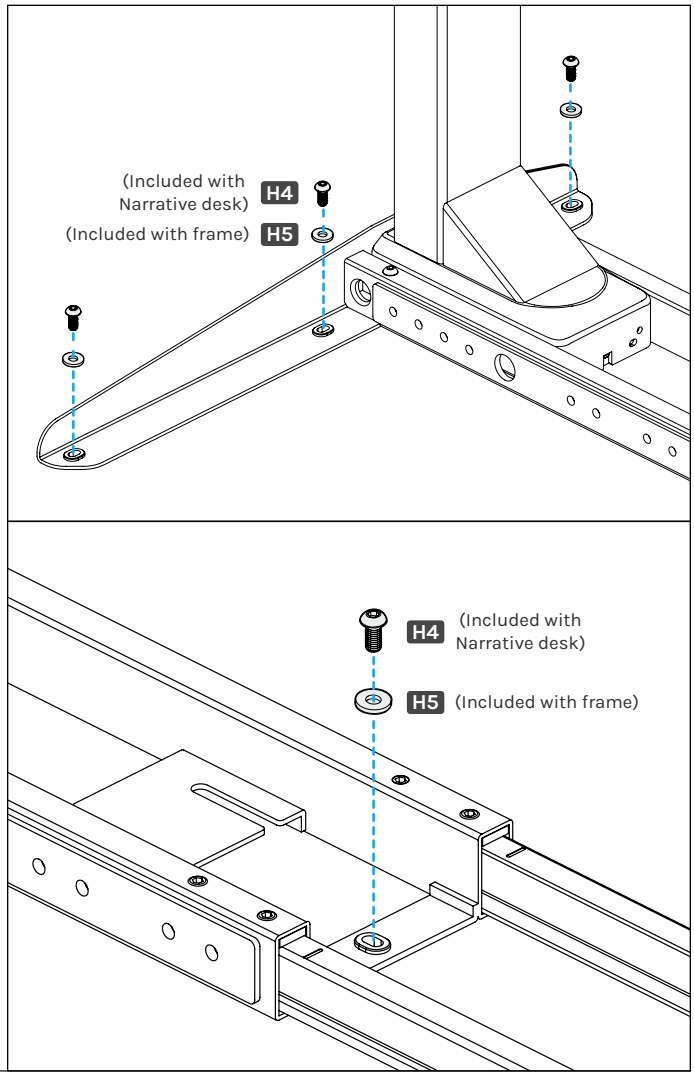

Step 9 - Secure Crossbar Rails

A. Locate the center indicator mark on the narrow sides of each Center Rail.

B. Slide each Crossbar Rail **(P6)** left or right until the center indicator marks are approximately centered between the two Crossbar Ends **(P5)**.

C. Insert four M8 x 8 Set Screws **(H3)** into each Crossbar End and tighten using the 4mm Allen Wrench **(H6)**.

IMPORTANT: Ensure that all eight set screws are making contact with the Crossbar Rails inside the Crossbar Ends and are tight before proceeding.

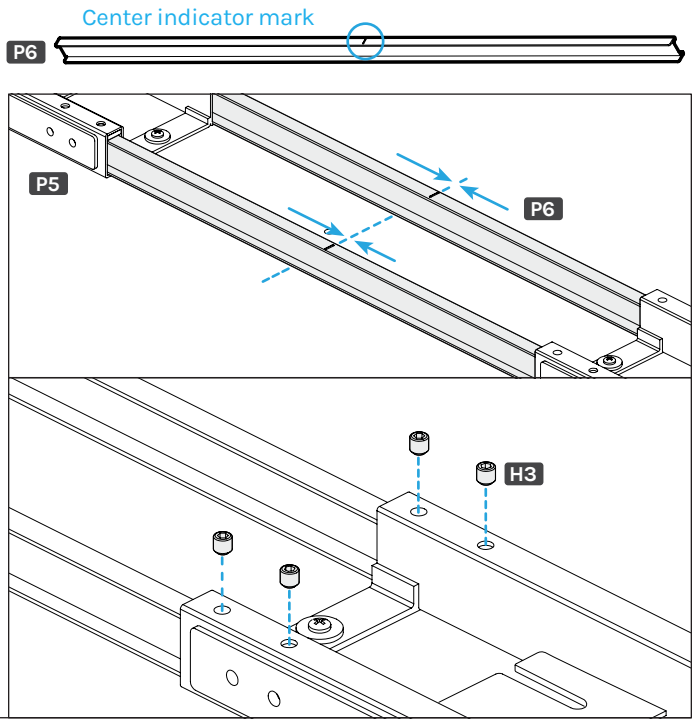

Step 10 - Attach Keypad

There are two sets of Keypad mounting holes pre-drilled into the left and right side on the bottom of the Narrative desktop, shown circled.

Choose the side of the desktop where you would like the Keypad located. Remember that you are assembling the desk upside down, so the Keypad will be on the opposite side once the desk is flipped over.

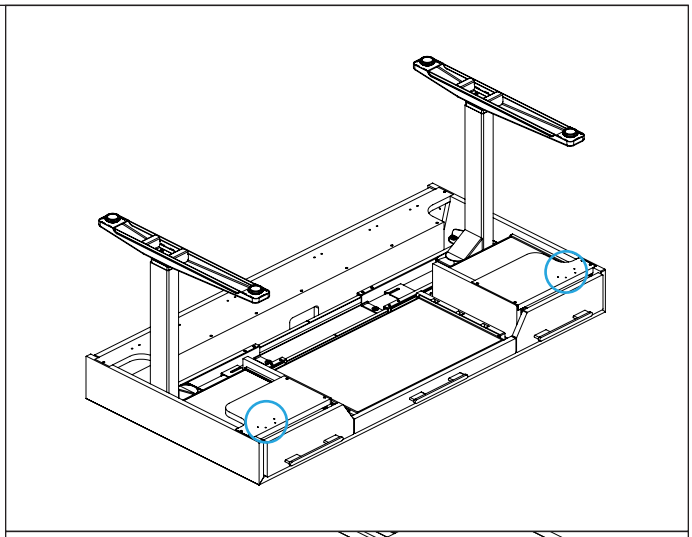

A. Align the mounting holes of the Keypad with the pre-drilled holes in the desktop.

B. Use the Phillips Screwdriver to attach the Keypad to the desktop with two #10 x 5/8" Wood Screws **(H14)** or the screws included with the Keypad. Be careful not to over tighten the screws to avoid stripping.

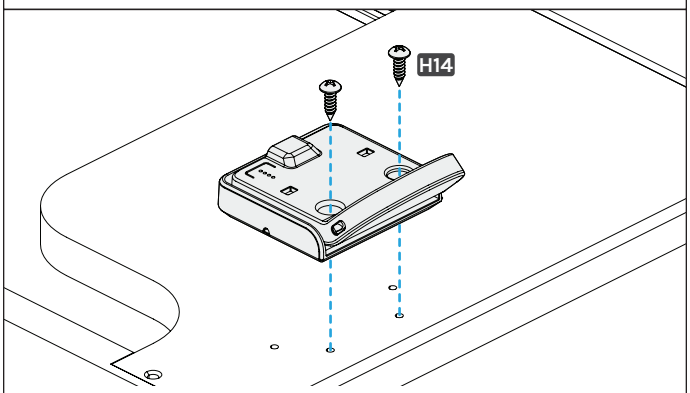

Advanced Paddle Keypad shown for reference.

Step 11 - Attach Control Box

The Control Box **(P7)** must be attached to the desk frame for the desk to function properly. We recommend placing it on the same side as the Keypad. It should be attached to the Crossbar End on either side of the desk frame.

A. Position the Control Box on the side of the desk you would like to attach it to with the port labeled "AC" facing the nearest Leg.

B. Slide the Control Box onto the Crossbar End so that the mounting hooks on the bottom of the Control Box interlock with the slots in the Crossbar End capture plate.

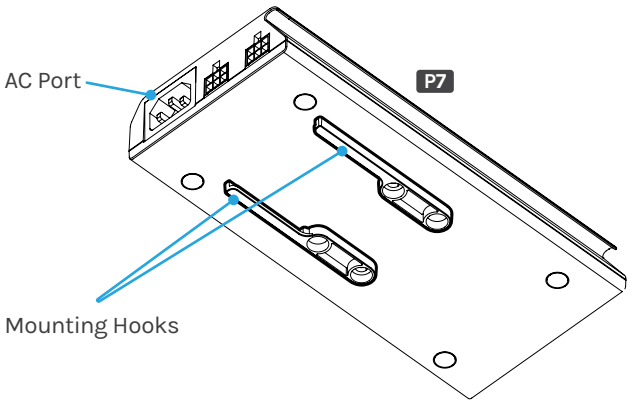

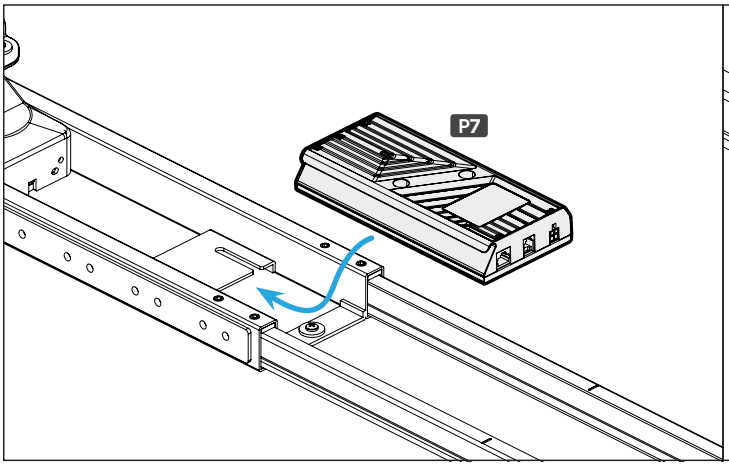

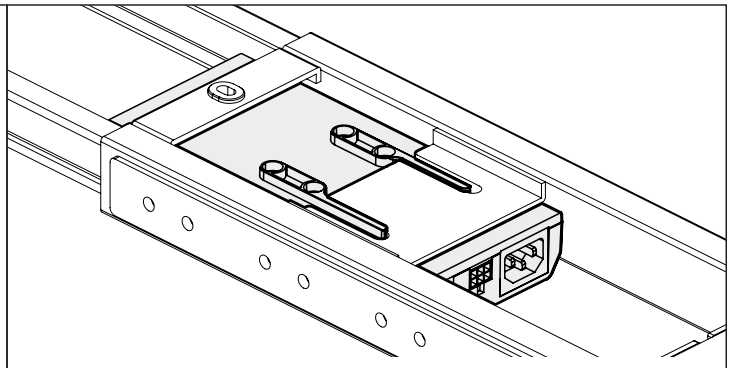

Top view of desk (with desktop hidden) showing the Control Box mounting hooks engaged with the Crossbar End capture plate slots.

Step 12 - Connect Cables

A. Connect the Power Cable **(P9)** to the port on the Control Box labeled “AC”.

B. Connect the cable from the Leg closest to the Control Box directly into the port labeled “M1”.

C. Connect the Leg Extension Cable **(P10)** into the port labeled “M2”, route the Leg Extension Cable back under the cable channel along the side of the Control Box, and connect it to the cable from the furthest Leg.

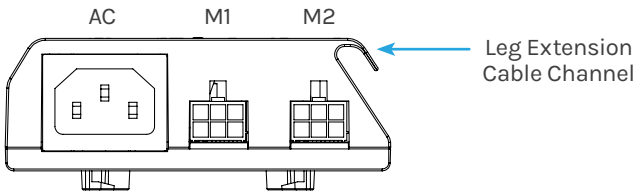

D. Connect the Keypad cable into the Control Box port labeled “HS”.

The Control Box port labeled “F” is used to connect the Bluetooth Adapter (FRM125) for use with the UPLIFT Desk App.

The Control Box port labeled “DC” is used to connect low voltage accessories with compatible connectors.

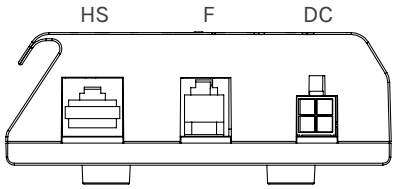

Accessory Installation

If you have purchased accessories that attach to your desk, such as Casters or Wire Management, it is easiest to install them now before flipping the desk over.

For accessories purchased separately, refer to the instructions provided with those products.

Install Casters (optional)

A. Rotate the pre-installed Leveling Glides counterclockwise to remove them from the threaded holes in the Feet.

B. Rotate the threaded stem of the Caster clockwise into the threaded holes in the Feet to install the Casters.

C. If your Casters have a hex nut between the threaded stem and wheels, you can use a 1⁄2” (12mm) or adjustable wrench (not included) to assist with the Caster installation process.

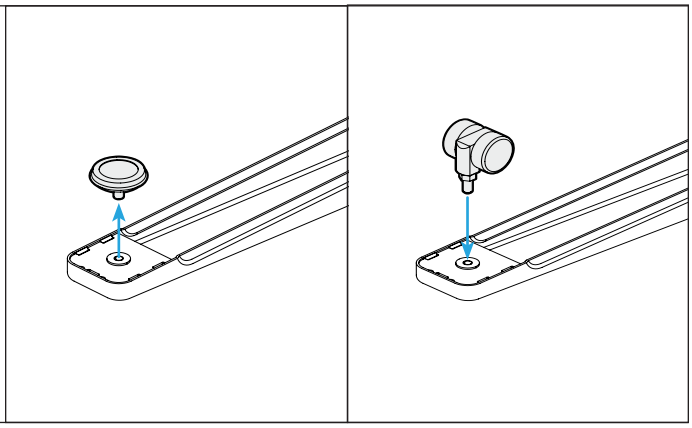

Attach Cable Mounts

Ten Cable Mounts **(H9)** are provided with your desk to attach under the desktop and organize cables. Organizing cables improves the appearance of your desk and prevents cables from snagging on anything while the desk is moving up and down.

IMPORTANT: The adhesive backing on the Cable Mounts is very strong, so carefully consider where you would like to locate them before attaching to the bottom of the desktop or desk frame.

A. Peel the backing off the back of the plastic mount to expose the adhesive pad.

B. Position the mount where you would like to attach it and press firmly for 10 seconds.

C. Take one of the hook and loop strips and slide it through the openings in the plastic mount.

D. Bundle cables and wrap the hook and loop strip around the bundle to secure it in place.

Hook and loop strips can also be used without the plastic mounts in places where they can be slid through the gap between the underside of the desktop and the frame.

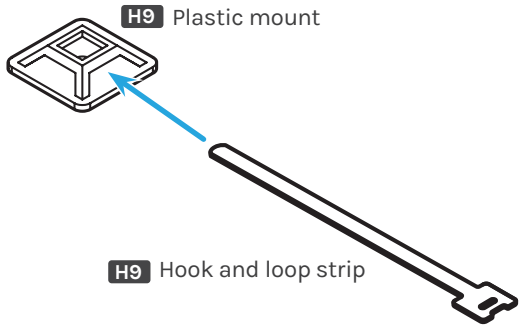

Attach Wire Management Tray (optional)

The Narrative desk comes with a spacious rear cavity for cable storage. If you would like additional wire management, install the Wire Management Tray **(P12)** included with the desk frame.

A. Position the Wire Management Tray **(P12)** where you would like to attach it. The tray can be attached with the opening facing the front or the back of the desk. Position the opening in the most convenient direction for access.

B. Use a Phillips Screwdriver to attach the Tray to the desktop using two #10 x 5/8" Wood Screws **(H14)**.

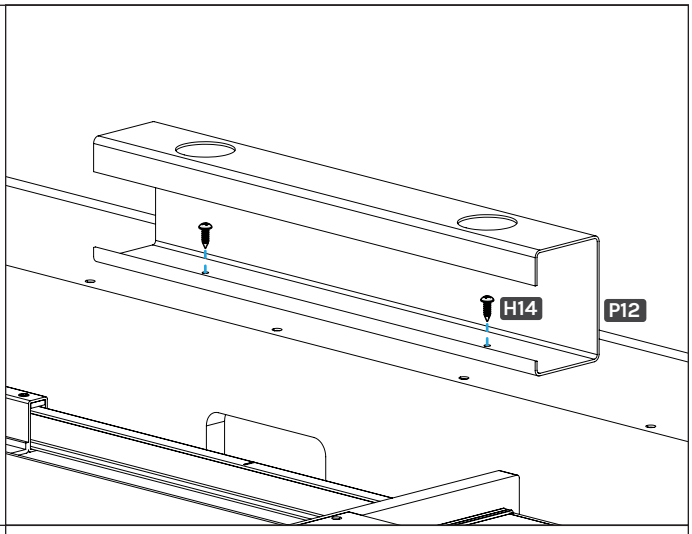

Install Accessory Anchor Plates (optional)

The Under Desk Hammock can be attached to the Narrative desk at the patented mounting points located on the back side of the Crossbar Ends where shown circled.

Attaching the hammock to the frame requires the use of the included Anchor Plates **(P11)**. Refer to the instructions provided with the hammock for attaching to the Anchor Plates.

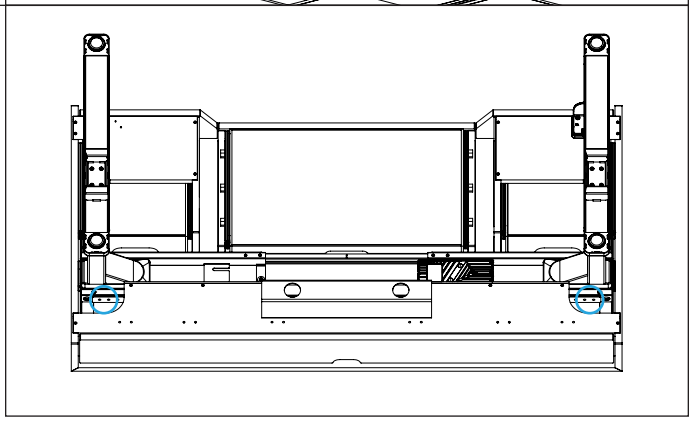

A. To attach the Anchor Plates to the frame, align the two smaller holes in the Anchor Plates with the last two threaded holes in the back side of each Crossbar End closest to the Side Bracket as shown.

B. Loosely insert two of the M8 x 10 Screws **(H7)** through Anchor Plate holes and into the threaded holes in the Crossbar End.

C. Tighten the screws using the 5mm Allen Wrench **(H8)**.

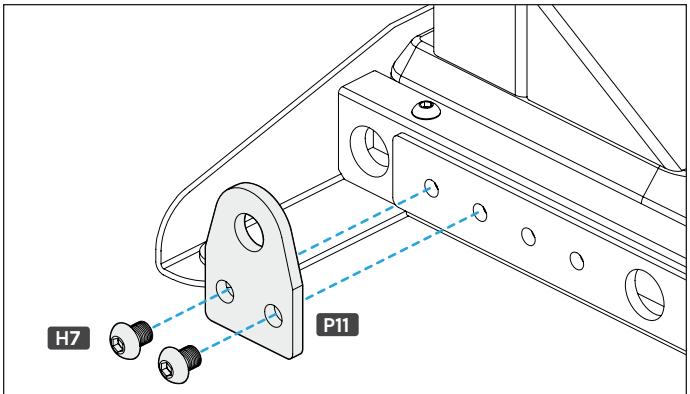

Flip Desk Over

When preparing to flip the desk over, be aware of loose cables. Two people are recommended.

A. With one person located at each end of the desk, grasp the desk Leg with one hand and the Narrative desktop with the other where indicated by the arrows.

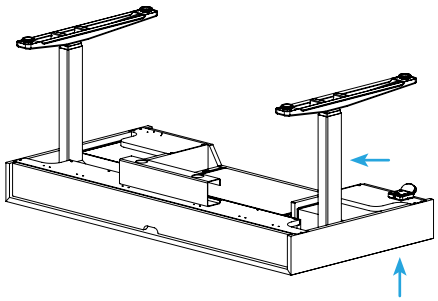

B. Carefully lift while rotating the desk toward the back so the Keypad is facing up as shown.

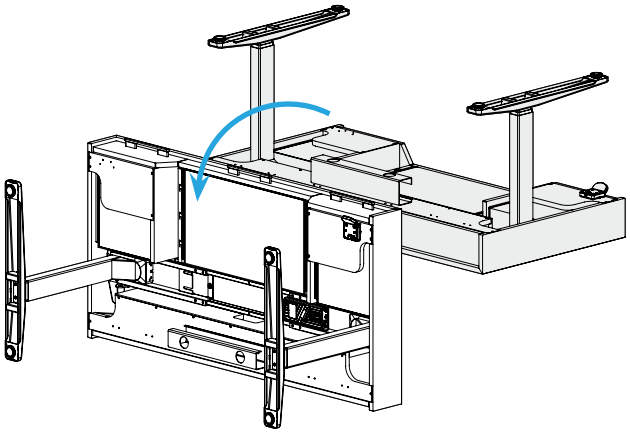

C. Readjust your grip and continue to rotate the desk until it is rightside up.

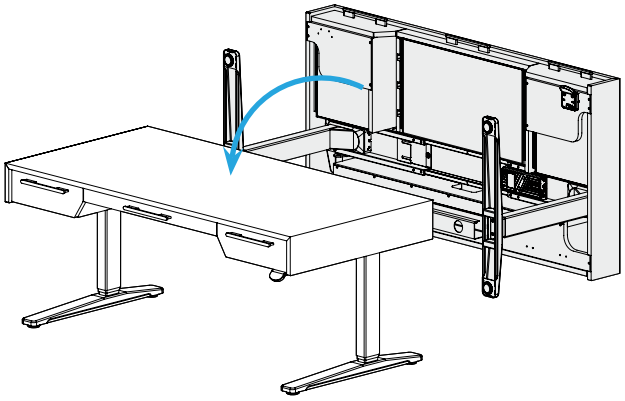

Position Desk

Position the desk where you would like it to be located. Don't drag the desk or lift the desk by just the desktop; doing so may put undue stress on the attachment screws and threaded inserts.

A. If your desk has Casters, moving is easy. If the Casters include locks, unlock them to roll the desk to the desired location. Once in place, relock the Casters to keep the desk stationary and improve stability.

B. If your desk does not have Casters, it's recommended to use two people to lift the desk on each side—do not drag it. Be sure to lift by holding the frame Leg with one hand and the desktop with the other hand, as shown by the arrows.

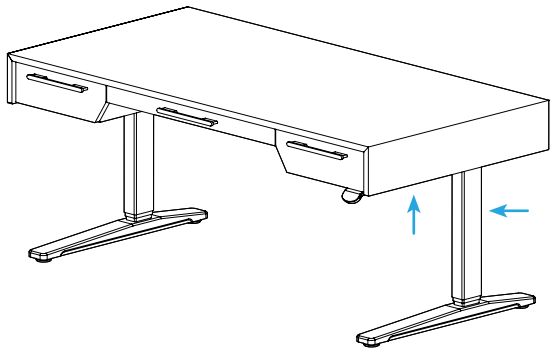

Prepare Desk & Surroundings

A. Check the desk's surroundings to make sure there will be no obstacles within the desk's path while it is being raised or lowered. Do not place any objects underneath the desk that are taller than 19" and be aware of any accessories mounted above or below your desk.

B. Adjust the Leveling Glides as needed to level the desk. Each Leveling Glide provides up to 3⁄8" of leveling.

C. Ensure that the Power Cord and all accessory cords are long enough to accommodate the raising and lowering of your desk.

D. Plug your desk into a grounded, 100-240V power outlet. If you have a Keypad with a display you should see it light up confirming the desk is powered. If you have a Keypad without a display, look at the Control Box under the desk to see if the small LED indicator is illuminated.

E. Perform the desk reset procedure below. Slowly lower and raise the desk while watching all cables and clearances to ensure there are no cable snags or obstacles.

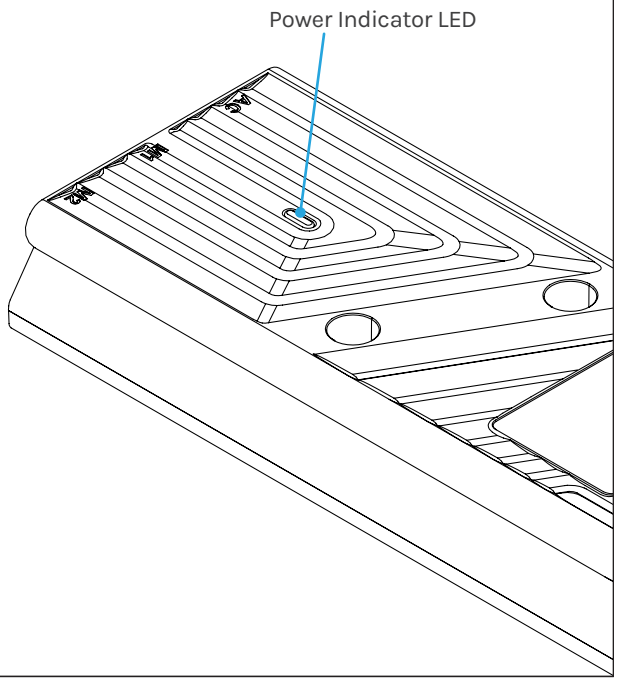

Perform Desk Reset Procedure

IMPORTANT: Before using your desk, perform the Desk Reset Procedure below to sync the Legs and Control Box.

1. Remove all items from under the desk to allow it to travel to its lowest height.
2. Press the down button once.
3. Hold the down button until the desk stops at its lowest position.
4. Hold the down button again for 30 seconds or until the display changes. Keypads with a display will show “ASr” when ready to reset. Paddle Keypads will display “RESET.”
5. Hold the down button again until the desk lowers slightly, rises, and stops. If the desk didn’t move, try this step again.
6. Try operating the desk. If the desk is working properly, you’re done. If the desk is not working properly, continue with the following steps.
7. Unplug the power cord from the electrical outlet.
8. Hold the down button for 10 seconds to discharge any stored power in the control box.
9. Plug the desk back in and restart the Desk Reset process steps a second time.
10. Try operating the desk again. If the desk is working properly, you’re done and the desk is ready to use.

If you have an Advanced Keypad, see the Programming section below for further information on how to use your Keypad.

Programming (Advanced Keypads only)

These UPLIFT Desk programming instructions are compatible with all UPLIFT Advanced Keypads except the Advanced Paddle Keypad.

For Advanced Paddle Keypad programming steps, refer to the instructions provided with that Keypad.

Set & Use Memorized Heights

Save heights on the keypad:

1. Hold the up or down button to move the desk to the desired height.
2. Tap the “M” button followed by a number button (1, 2, 3, or 4) to assign the current height to that number.
3. Once the memory buttons are programmed, tap a numbered button and the desk will automatically move to the preset height.

If you would rather the button be pressed and held instead of tapped to make height adjustments, see One-Touch or Constant-Touch below.

Keypad Lock

Lock the keypad to prevent accidental adjustments:

1. Hold the “M” button until the display shows “LOC.”
2. To unlock your keypad, hold the “M” button until the display shows the current numeric height setting.

In the event of a power outage, the keypad will return to the unlocked setting.

One-Touch, Constant-Touch, or Double-Tap

One-touch is the default setting of the control box and requires only a single touch of a keypad button to move the desktop to a saved height. Constant-touch requires the continuous hold of a button or paddle to move the desktop to a saved height. Double-tap requires pressing the keypad button twice to move the desktop to a saved height. This helps avoid accidental activation of the desk if a keypad button is bumped.

Toggle between one-touch and constant-touch modes:

1. Hold the down button until the desk reaches its lowest position.
2. Hold the down button again until the display flashes “ASr.”
3. Hold the “1” button until the display shows “10.1” (one-touch), “10.2” (constant-touch), or “10.8” (double-tap), and then goes back to “ASr.” While the display is flashing “ASr,” hold the “1” button to toggle between the three settings.
4. Wait for the display to change back to “ASr.”
5. Hold the “down” button until the desktop lowers and rises slightly and the display changes back to the numeric height setting.

Units of Measurement

Switch between inches and centimeters on your display:

1. Hold the down button until the desk reaches its lowest position.
2. Hold the down button again until the display flashes “ASr.”
3. Hold the “2” button until the display shows “10.3” (centimeters) or “10.4” (inches) and then goes back to “ASr.” While the display is flashing “ASr,” hold the “2” button to toggle between the two settings.
4. Wait for the display to change back to “ASr.”
5. Hold the “down” button until the desktop lowers and rises slightly and the display changes back to the numeric height setting.

Calibrate Desk Height

Compare the desk height to the displayed height:

1. Press and hold the “down” button until the desk reaches its lowest position.
2. Use a tape measure to check the height from the floor to the top surface of the desktop. If the measurement matches the displayed height, the desk is already calibrated and ready for use.

If the displayed height doesn’t match the desk’s actual height, follow these steps:

1. Hold the down button until the display flashes “ASr.”
2. Hold the “M” button until the numeric display begins flashing.
3. Tap the up or down button to adjust the displayed height to match your desk’s measured height.
4. Wait for the display to change back to “ASr.”
5. Hold the “down” button until the desktop lowers and rises slightly and the display changes back to the numeric height setting.

Max/Min Height Limits

Set the desk’s maximum height limits:

1. Hold the up or down button to move the desk to the desired height.
2. Tap the “M” button once and “S-” will appear on the display.
3. Tap the up button and the display will flash “S-.”
4. Hold the “M” button until the display shows “999” and changes to the numeric height of the now set upper limit.

Set the desk’s minimum height limits:

1. Hold the up or down button to move the desk to the desired height.
2. Tap the “M” button once and “S-” will appear on the display.
3. Tap the down button and the display will flash “S-.”
4. Hold the “M” button until the display shows “000” and changes to the numeric value of the now set lower limit.

Remove the maximum and minimum height limits:

1. Tap the “M” button once and the display will show “S-.”
2. Hold the “M” button until the display shows “555” and changes to the current numeric height setting.

Anti-Collision System Sensitivity Adjustment

Adjust the sensitivity on your desk's advanced anti-collision system:

1. Hold the down button until the desk reaches the lowest position.
2. Hold the down button again until the display flashes "ASr."
3. Hold the UP button until the display shows "10.5," "10.6," or "10.7". This is your current anti-collision sensitivity setting.

   10.5 = most sensitive setting (possible false positives)

   10.6 = moderate sensitivity setting

   10.7 = least sensitive setting

   While "ASr" is flashing, press the up button to toggle between the three settings.
4. Wait for the display to change back to "ASr."
5. Hold the "down" button until the desktop lowers and rises slightly and the display changes back to the numeric height setting.

Troubleshooting

Error Code	Description	Troubleshooting Solution
H01	Overheated	The desk motor has a 10% duty cycle to protect from overheating. For example, in a 20 minute period if your desk motor is activated for 2 minutes you will want to let it rest for 18 minutes. Otherwise you may see an H01 code on your keypad
E01-E06	Firmware or connectivity issues	Check all cables to ensure they're all firmly plugged in, and perform Reset Procedure above
E07-E012	Legs are uneven	Perform Reset procedure

Starting & Stopping

If your desk is continuously starting and stopping as you try to raise or lower it, check to make sure the Control Box is securely attached to the frame. The Control Box MUST be attached to your frame in order for your desk to function properly.

Desk Reset Procedure

If your keypad display shows any of the error codes listed, perform the Desk Reset Procedure provided at the end of the desk assembly steps to clear it. If the error message persists after performing the reset procedure or if there is a height difference between the Legs of more than 1.5", email us at support@upliftdesk.com or call 800-349-3839.

Perform the desk reset procedure any time the desk is unplugged or loses power.

Notes

Notes

UPLIFT DESK®

Work Better. Live Healthier

upliftdesk.com
info@upliftdesk.com
800-349-3839
512-614-3152

SAVE THIS MANUAL

Study this manual carefully. If this product is sold, please provide this manual to the buyer, installers, or support personnel operating the product.

© Copyright Notice: This manual is a component of this UPLIFT Desk product. This manual is a part of the scope of delivery, even if the item is resold. This manual is also available on the UPLIFT Desk website: upliftdesk.com. This manual is subject to United States copyright law.

AI-UPL980-SRD-1.0